(Scale: 1.2: 1)

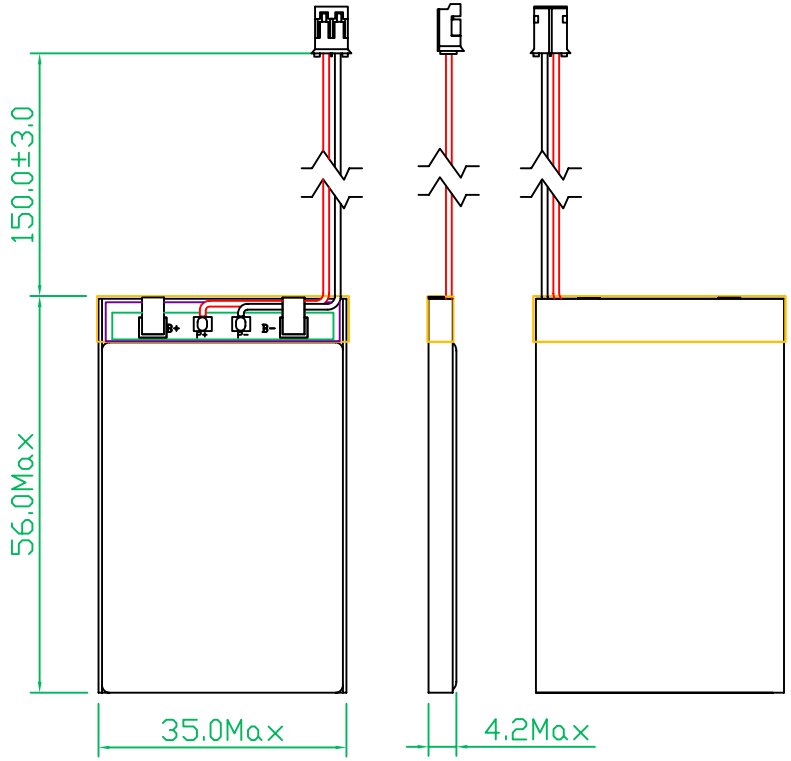

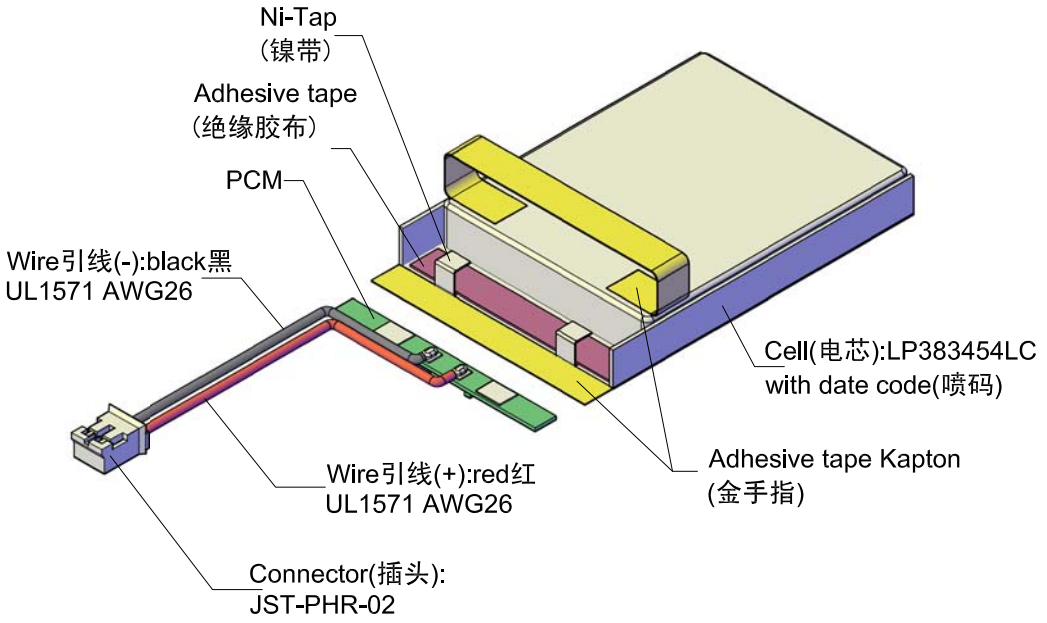

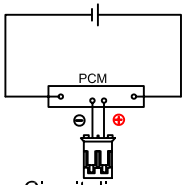

Circuit diagram

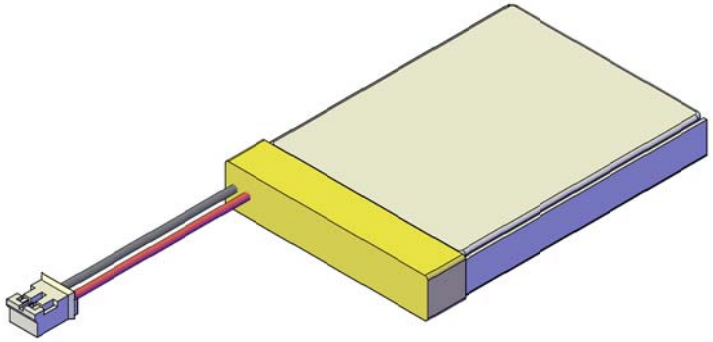

Model:	LP383454LC		Battery protection Related Value: (相关的电池保护值)	Overcharge Detection Voltage(V) 过充保护电压(V)	4.28±0.05
Battery pack specification (电池组规格)	Min.Capacity 最低容量(mAh) (0.2C,25±3°C) *Single cell capacity (单体电芯容量)	680		Overdischarge Detection Voltage(V) 过放保护电压(V)	3.0±0.1
	Typical Capacity 典型容量(mAh) (0.2C,25±3°C) *Single cell capacity (单体电芯容量)	720		Limited to Max loading current 仅用于最大的负载电流 peak value (A) 峰值 2 (A) constant (A) 持续 1 (A)	
	Nominal Voltage 标称电压(V)	3.7		Customer required Max loading current 客户要求最大的负载电流 peak value (A) 峰值_____(A) constant (A) 持续_____(A)	
	Internal impedance 内阻(≦) (mΩ,AC 1KHZ)	200		If actual application loading current is bigger than EEMB suggested, please Indicate.The application profile is important for an appropriate PCM design. (如果实际应用的负载电流大于EEMB提供值, 请提出来. 实际的应用情况对PCM的设计至关重要)	
Ambient Conditions (环境温度)	Charge Temp.充电温度(°C)	0~45			
	Discharge Temp.放电温度(°C)	-40~60°			
	Humidity(湿度)	65±20%			

Remark(备注):
1. No scratch,distoration,discoloration and leakage on the appearance of the cell(电池表面无划痕、变形、污点及漏液等现象).
2. Rohs compliant(严格按照ROHS要求生产).

EEMB BATTERY

		Drawn:	Pengling	Revise No.:	E4-2009
		Checked 1:	Jane	Projection:	
		Checked 2:		Page:	1/1
Title	LP383454LC-PCM-LD/	Approved:		Scale:	1 : 1
File NO.	A06061	Draw Date:	2012/03/15	Unit:	mm