ALUMINUM ELECTROLYTIC CAPACITORS

APPROVAL NO. 6493

BXJ 10 VC 220 (M)

SERIES	BXJ
RATING	10 V 220 ㎌
CASE SIZE	Ø 6.3 × 7.7 L

A. DIAGRAM OF DIMENSIONS

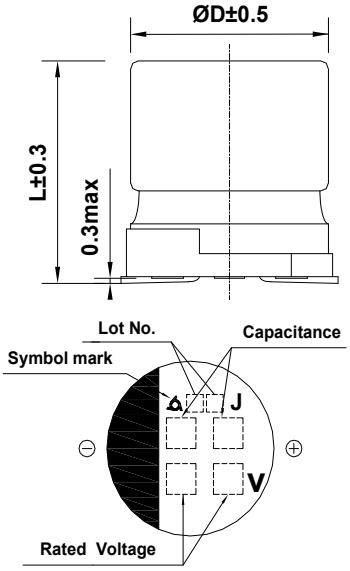

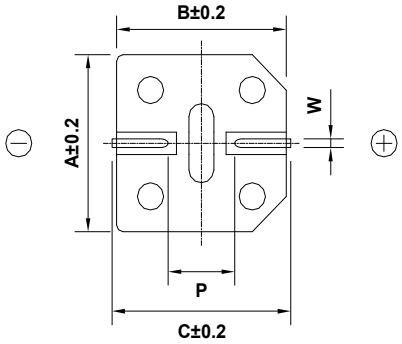

Recommended Solder land on PC board

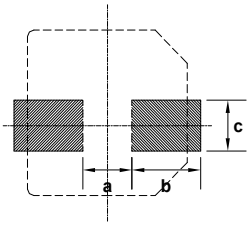

: Solder land on PC board

Case code	ØD	L	A	B	C	W	P	a	b	c
F80	6.3	7.7	6.6	6.6	7.2	0.5-0.8	1.9	1.9	3.5	1.6

B. ELECTRICAL CHARACTERISTICS

A. OPERATING TEMPERATURE RANGE : -55 ~ +105 ℃
B. RATED VOLTAGE : 10 V_{DC}
C. SURGE VOLTAGE : 13 V_{DC}
D. CAPACITANCE TOLERANCE : ± 20% at 20℃, 120㎐
E. LEAKAGE CURRENT : Lower 22 ㎂, after 2 minutes at 20℃
F. DISSIPATION FACTOR (TANδ) : Lower 0.19 at 20℃, 120㎐
G. MAX. RIPPLE CURRENT : 280 mArms at 105 ℃, 100㎑
H. TEMPERATURE CHARACTERISTIC :
(Max. Impedance ratio) Z(-25℃) / Z(20℃) = 2
Z(-55℃) / Z(20℃) = 4 (at 120㎐)

I. LOAD LIFE : The following specifications shall be satisfied when the capacitors are restored to 20℃ after the rated voltage is applied for 2,000 hours at 105℃.
Capacitance change ≤ ±30 % of the initial value
Tanδ ≤ 300 % of the initial specified value
Leakage Current ≤ The initial specified value

J. SHELF LIFE : The following specifications shall be satisfied when the capacitors are restored to 20℃ after exposing them for 1,000 hours at 105℃ without voltage applied. The rated voltage shall be applied to the capacitors for a minimum of 30 minutes, at least 24 hours and not more than 48 hours before the measurement.
Capacitance change ≤ ±30 % of the initial value
Tanδ ≤ 300 % of the initial specified value
Leakage Current ≤ The initial specified value

K. CLEANING CONDITIONS : Solvent - proof
L. OTHERS : Satisfied characteristics KS C IEC 60384-4

※ IMP.(20℃,100㎑) : 0.34 (Ω) ↓